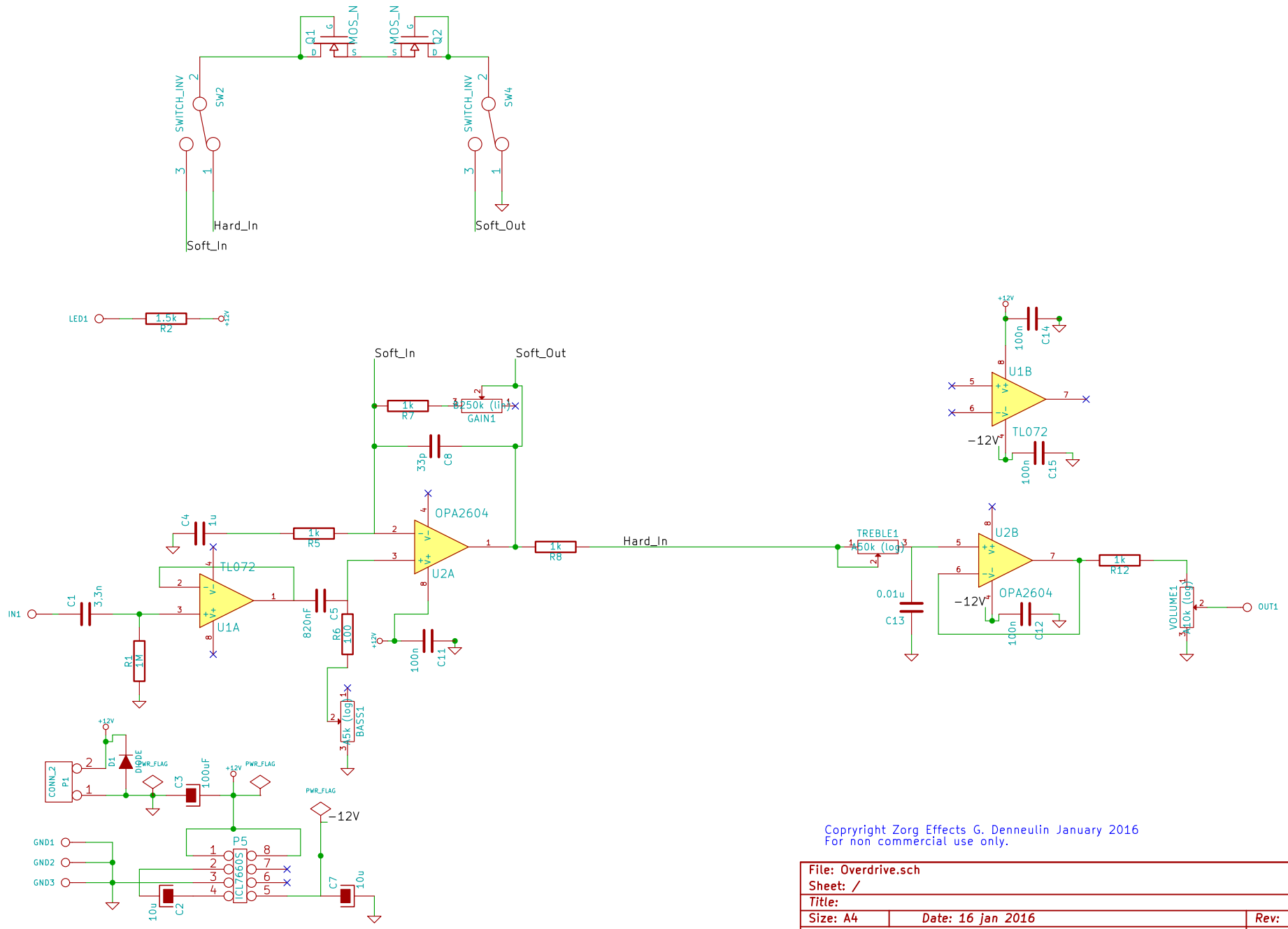

Copyright Zorg Effects G. Denneulin January 2016
For non commercial use only.

File: Overdrive.sch		
Sheet: /		
Title:		
Size: A4	Date: 16 jan 2016	Rev:
KiCad E.D.A.		Id: 1/1